We support PV systems

MultiRail System

ASSEMBLY INSTRUCTIONS

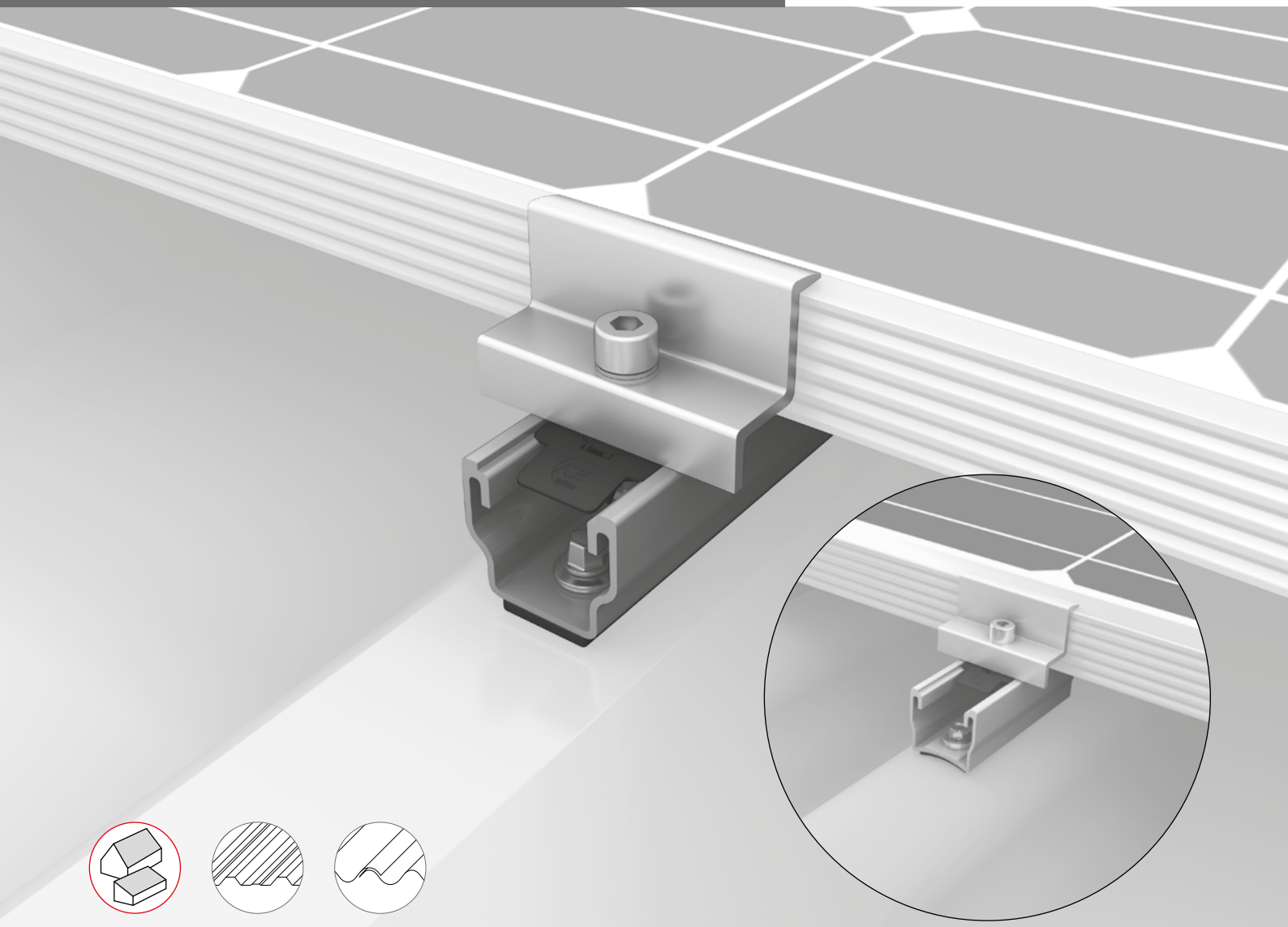

k2-systems.com

Content

- Tools overview 3
- General safety information 4
- The following guidelines apply 5
  - Planning with K2 Base 5
  - Roof requirements 5
  - Structural requirements 5
  - Important mounting instructions 5
- Components 6
  - Trapezoidal sheet metal 6
  - Corrugated sheet metal 8
- Assembly 10
  - Trapezoidal sheet metal 10
  - Corrugated sheet metal 14
- Optional assembly steps 20
  - Module frame grounding 20
  - Roof-parallel elevation with RailUp 20
- Notes 21

Quality tested – several certifications

K2 Systems stands for secure connections, highest quality and precision. Our customers and business partners have known that for a long time. Independent institutes have tested, confirmed and certified our capabilities and components.

Please find our quality and product certificates under:
k2-systems.com/en/technical-information

Tools overview

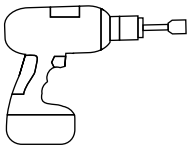

6 mm

8 mm

6 - 35 Nm
(4,5 - 22,2 lb-ft)

6 mm

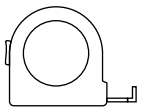

≥ 3,0 m

≥ 6,0 m

Digitale Toolbox

DO BA

Do you already know our digital services? Use our K2 DocuApp now and record the first important data directly at the customer or project site. Simply import the data into our online planning software K2 Base. Here you can plan your project easily, safely and quickly. You receive a detailed project report with assembly plan and static report. The K2+ interface enables seamless project data transfer to the planning tools of other manufacturers. With the K2 DocuApp, project documentation is done quickly and easily - without annoying paperwork.

Get started now and register:

base.k2-systems.com

docuapp.k2-systems.com

General safety information

Please note that our general mounting instructions must be followed at all times and can be viewed online at k2-systems.com/en/technical-information

- The equipment may only be installed and operated by qualified and adequately trained installers.

- Prior to installation, ensure that the product complies with on-site static loading requirements.
  For roof-mounted systems, the roof load-bearing capacity must always be checked.

- National and local building regulations and environmental requirements must be adhered to.

- Compliance with health and safety regulations, accident prevention guidelines and applicable standards is required.
  - Protective equipment such as safety helmet, boots and gloves must be worn.
  - Roofing works must be in accordance with roofing regulations utilising fall protection safeguards when eaves height exceeds 3 m.
  - At least two people must be present for the duration of the installation work in order to provide rapid assistance in the event of an emergency.

- K2 mounting systems are continuously developed and improved and the installation process may thereby change at any time. Prior to installation consult our website at
  www.k2-systems.com/en/technical-information for up-to-date instructions.
  We can send you the latest version on request.

- The assembly instructions of the module manufacturer must be adhered to.

- Equipotential bonding/grounding/earthing between individual parts is to be performed according to country specific standards, as well as national laws and regulations.

- At least one copy of the assembly instructions should be available on site throughout the duration of the installation.

- Failure to adhere to our general safety and assembly instructions and not using all system components, K2 is not liable for any resulting defects or damages. We do not accept liability for any damage resulting in the use of competitor's parts. Warranty is excluded in such cases.

- German law shall apply excluding the UN Convention on CISG. Place of venue is Stuttgart. Our General Terms of Business apply.

- If all safety instructions are adhered to and the system is correctly installed, there is a product warranty entitlement of 12 years! We strongly recommend reviewing our terms of guarantee, which can be viewed at www.k2-systems.com/en/technical-information
  We will also send this information on request.

- Dismantling of the system is performed in reverse order to the assembly.

- K2 stainless steel components are available in different corrosion resistance classes. Each structure or component must be carefully checked for possible corrosion exposure.

The following guidelines apply

The MultiRail system can be installed as standard under the following conditions. Even if the system is capable of meeting higher demands through the integration of safety standards, please get in touch with your contact at K2 Systems if the specified values are exceeded.

Planning with K2 Base

We recommend our free online software K2 Base for the planning. In five steps, you can plan the right assembly system and get a construction recommendation, parts list and the structural analysis report. Simply register and start planning: base.k2-systems.com

Roof requirements

- The sufficient holding force of the roof covering at the support or substructure must be ensured on site.
- Roof pitch: 5 - 75°
- Thickness trapezoidal sheet metal: ≥ 0.4 mm steel or ≥ 0.5 mm aluminium
- Sheet quality steel at least S235 acc. DIN EN 10025-1
- Minimum tensile strength for aluminium 165 N/mm²
- High crest distance ≥ 22 mm, flush area surrounding the bore hole: ≥ 20 mm
- High bead radius for corrugated sheet metal: r = 22 - 45 mm

Structural requirements

The static verification of the component is automatically calculated with the K2 Base planning software for the respective location. The design provided in a project report must be followed.

Important mounting instructions

- On-site general standards and regulations for lightning protection must be observed and consultation with a specialist to create a lightning protection concept is recommended (use lightning protection clamp if necessary). Country-specific regulations must be observed.
- After 13.60 m (length of the module row in the vertical crest direction) a thermal separation must be installed.
  For this purpose, two rails must be fixed one behind the other on the same high crest. The distance between the MultiRails must be at least 30 mm.
- If the trapezoidal sheet is fastened with storm washers, please do not fasten the MultiRails on the storm washers! Spacing must be measured beforehand.
- Fasten the MultiRails to corrugated or trapezoidal sheet metal with thin sheet metal screws approved by the building authorities.
- Horizontal distance (verge-to-verge direction) between the short sides of the modules must be at least 5 mm

Components

Trapezoidal sheet metal

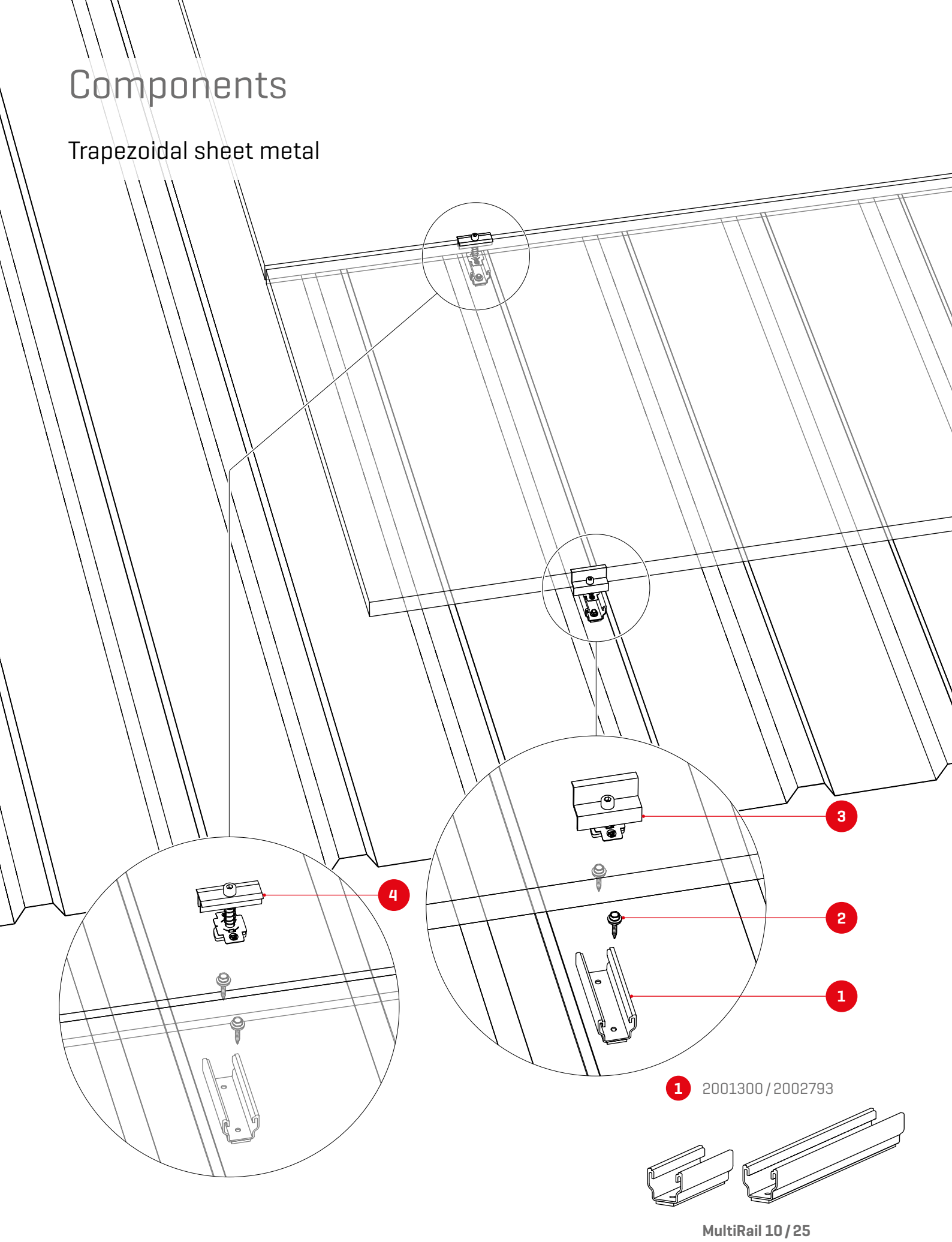

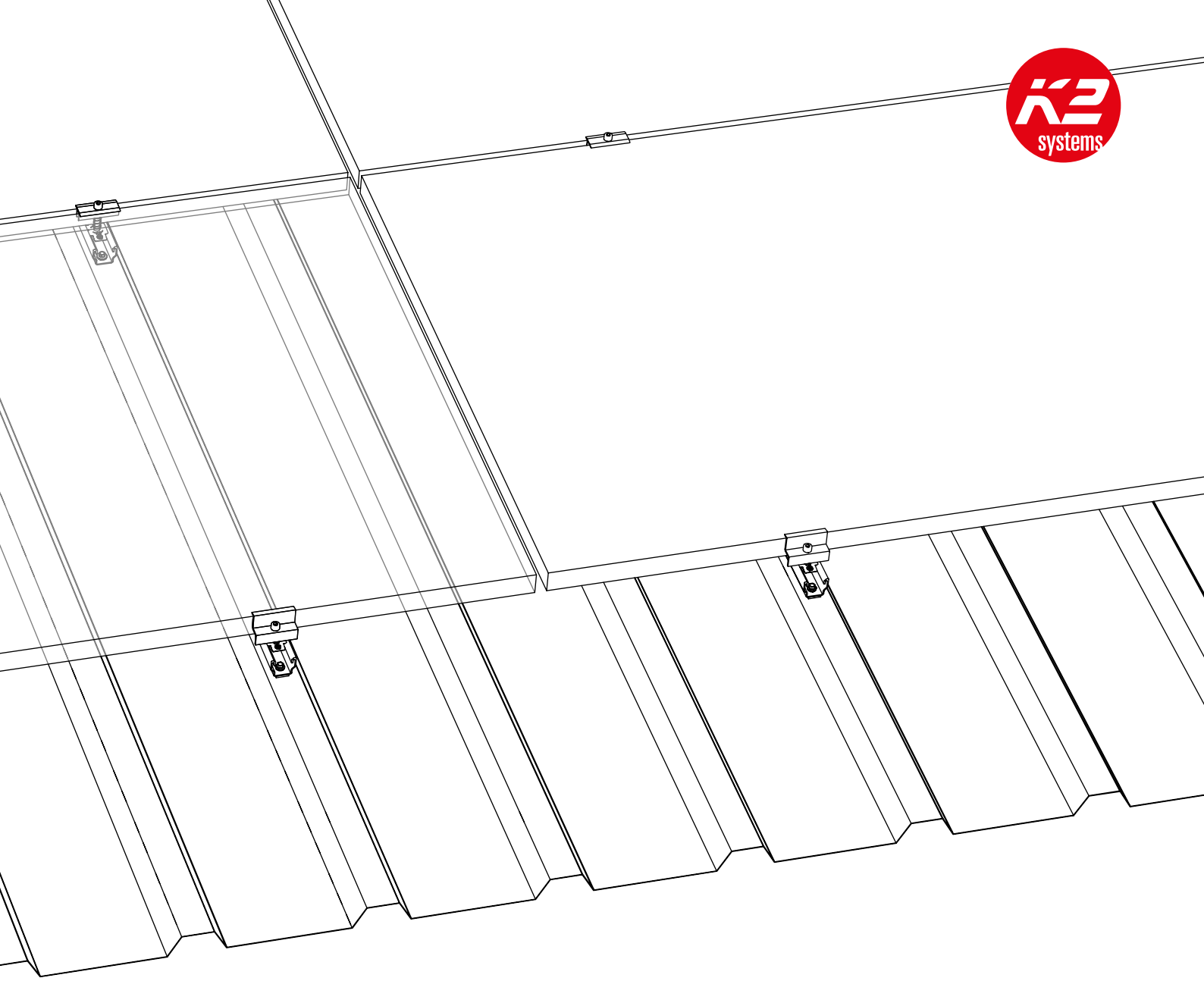

2 1005207

Self-tapping screw with sealing washer

3 Item number project specific!

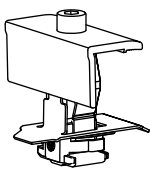

K2 Clamp EC 25 - 40

Silver	2004147
Black	2004149

K2 Clamp EC / OneEnd / Modul End Clamp Standard

4 Item number project specific!

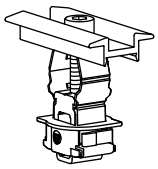

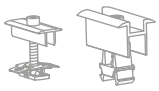

K2 Clamp MC 25 - 40

Silver	2004146
Black	2004148

K2 Clamp MC / OneMid / Module middle clamp XS

Optional components

See page 20!

2003191

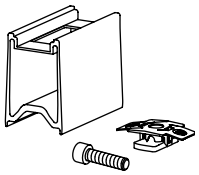

RailUp Set

2001881

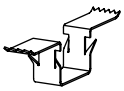

TerraGrif K2SZ

Components

Corrugated sheet metal

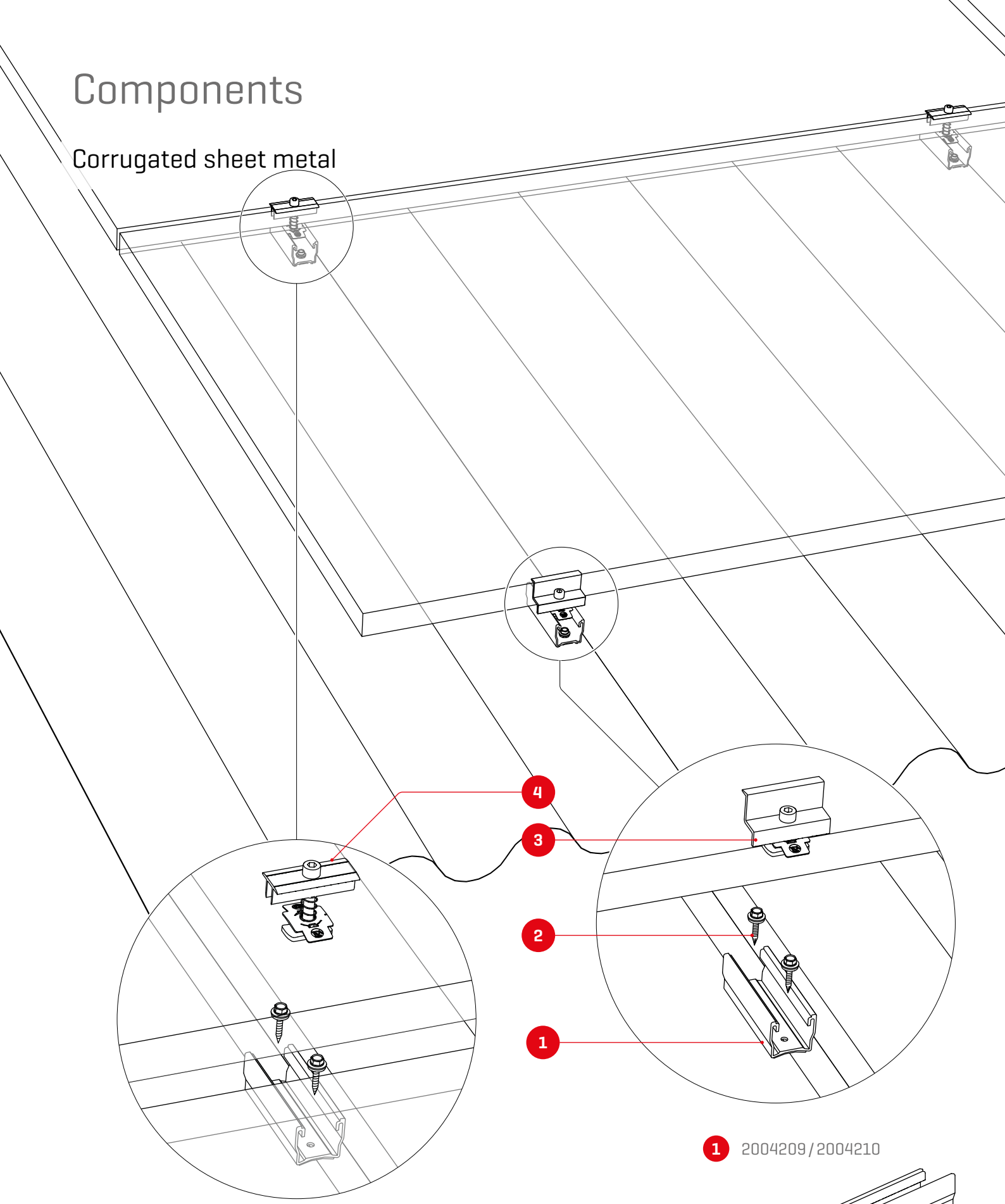

1 2004209 / 2004210

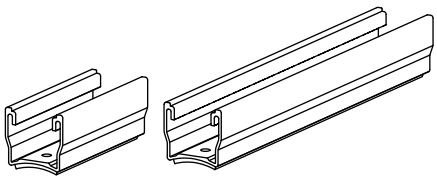

MultiRail 10 / 25 CSM

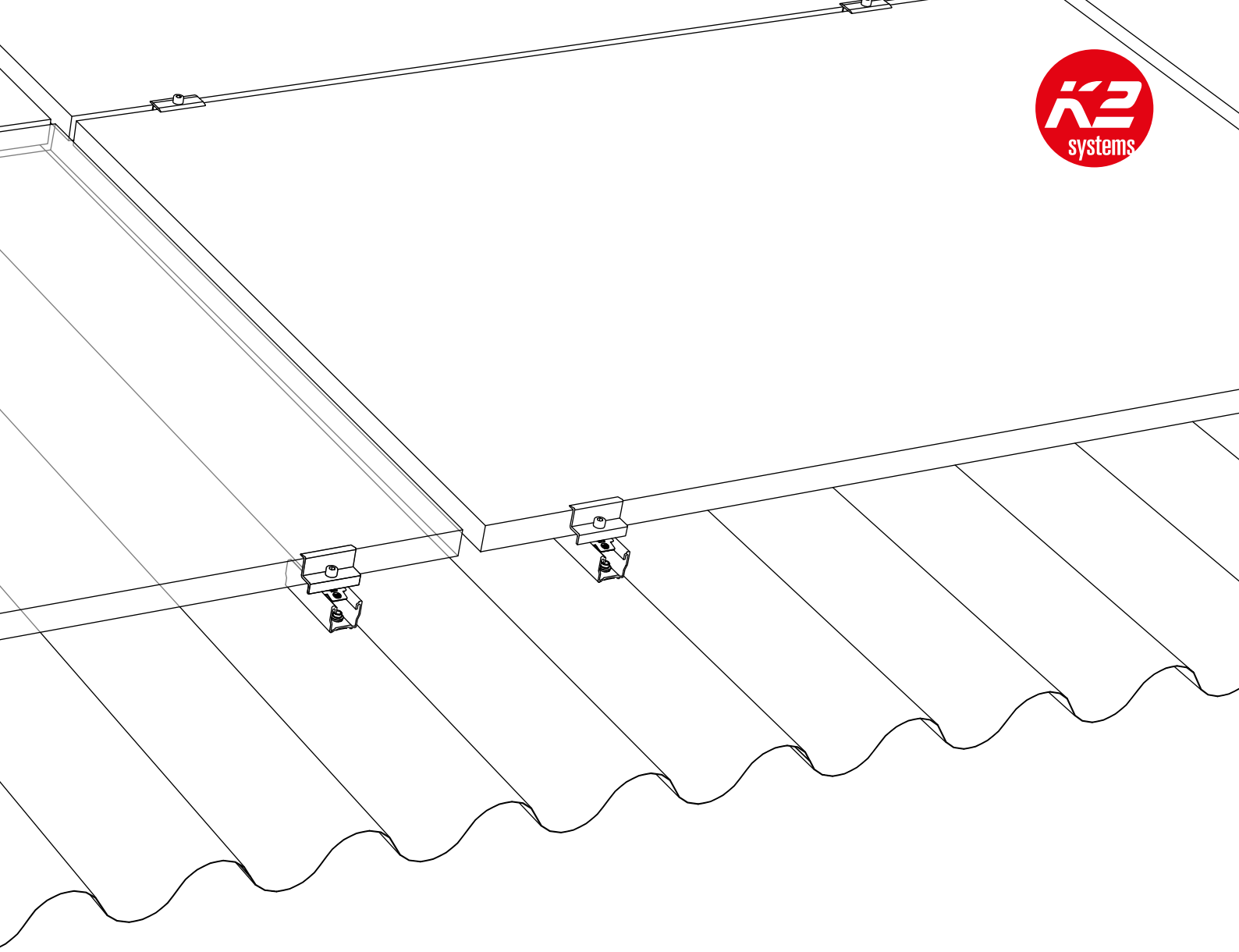

2 1005207

Self-tapping screw with sealing washer

3 Item number project specific!

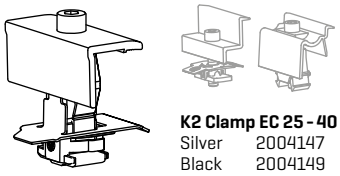

K2 Clamp EC 25 - 40
Silver 2004147
Black 2004149

K2 Clamp EC / OneEnd / Modul End Clamp Standard

4 Item number project specific!

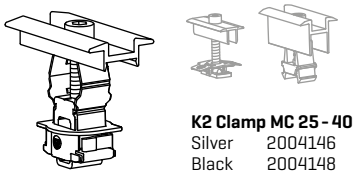

K2 Clamp MC 25 - 40
Silver 2004146
Black 2004148

K2 Clamp MC / OneMid / Module middle clamp XS

Optional components

See page 20!

2003191

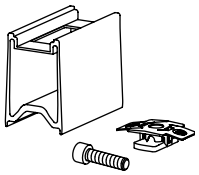

RailUp Set

2001881

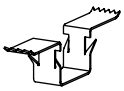

TerraGrif K2SZ

Assembly

Trapezoidal sheet metal

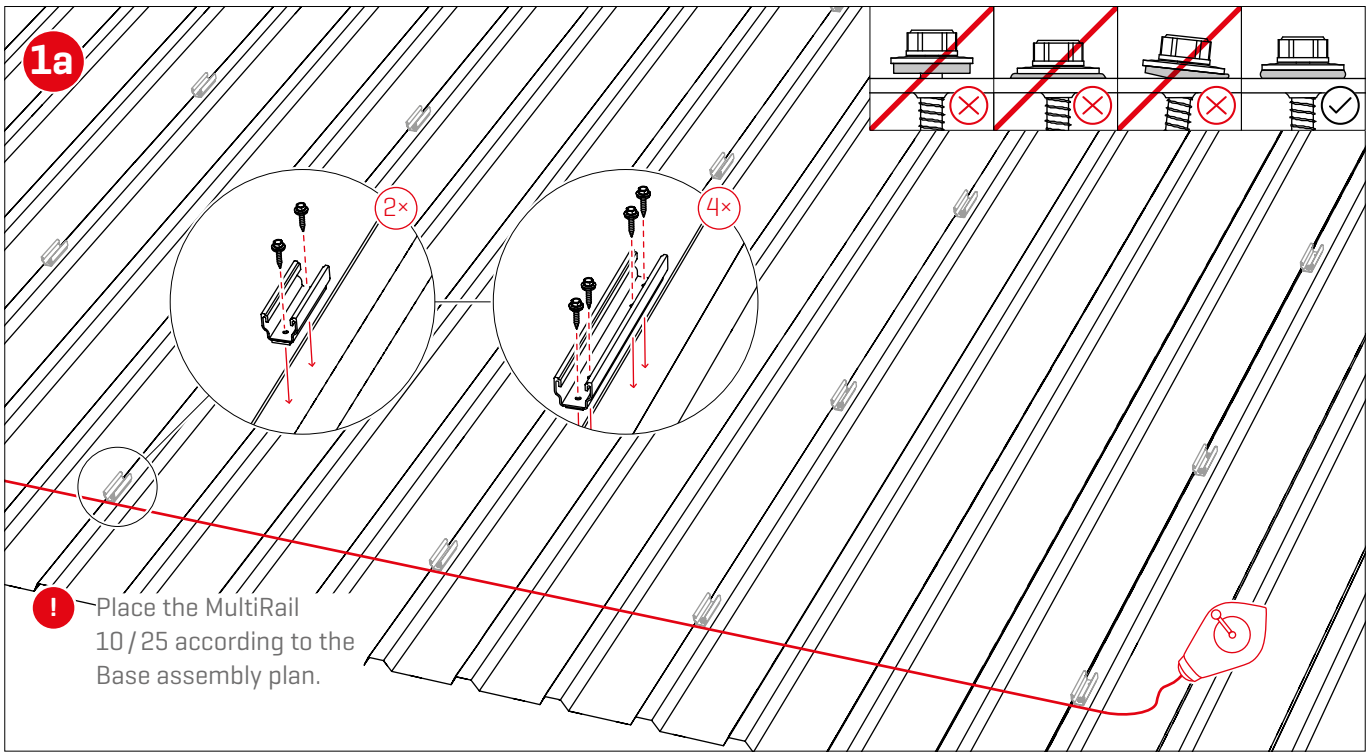

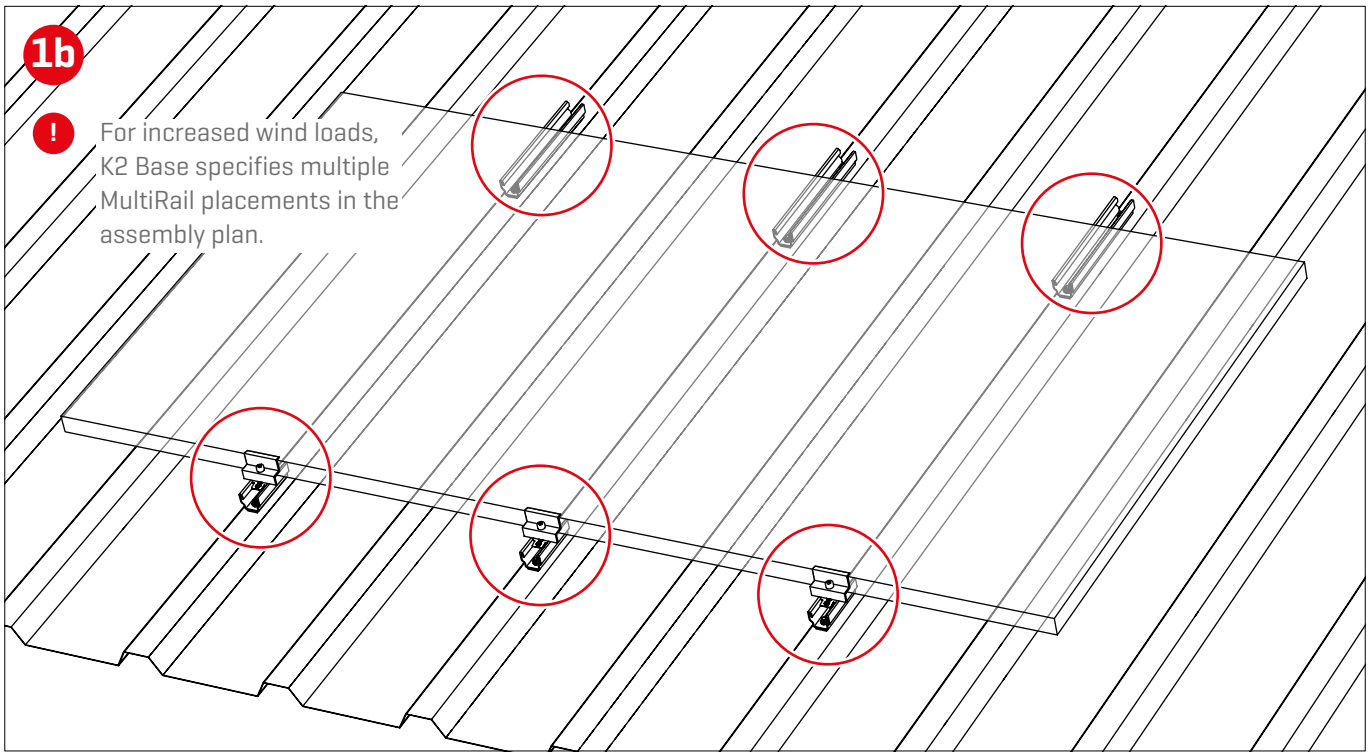

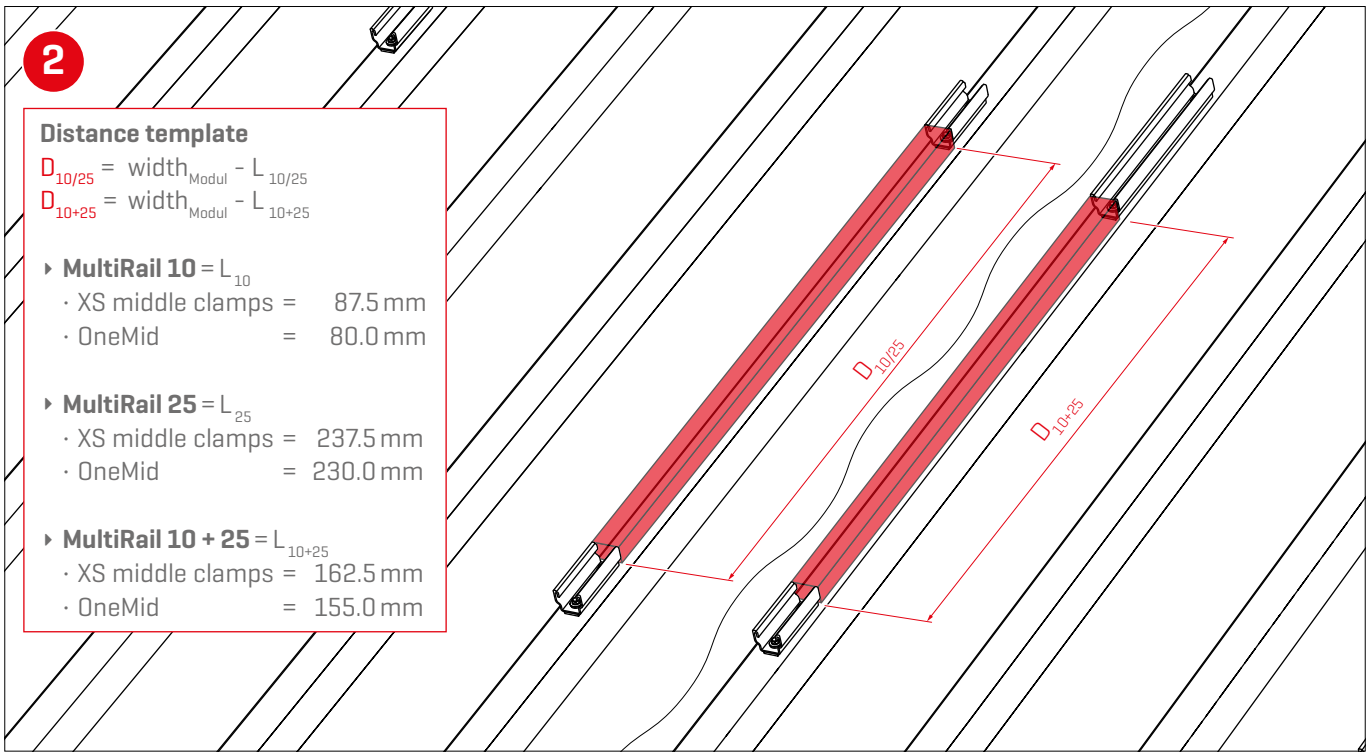
2
Distance template
$D_{10/25}$ = $width_{Modul}$ - $L_{10/25}$
D_{10+25} = $width_{Modul}$ - L_{10+25}
MultiRail 10 = L_{10}
· XS middle clamps = 87.5 mm
· OneMid = 80.0 mm
MultiRail 25 = L_{25}
· XS middle clamps = 237.5 mm
· OneMid = 230.0 mm
MultiRail 10 + 25 = L_{10+25}
· XS middle clamps = 162.5 mm
· OneMid = 155.0 mm
$D_{10/25}$
D_{10+25}

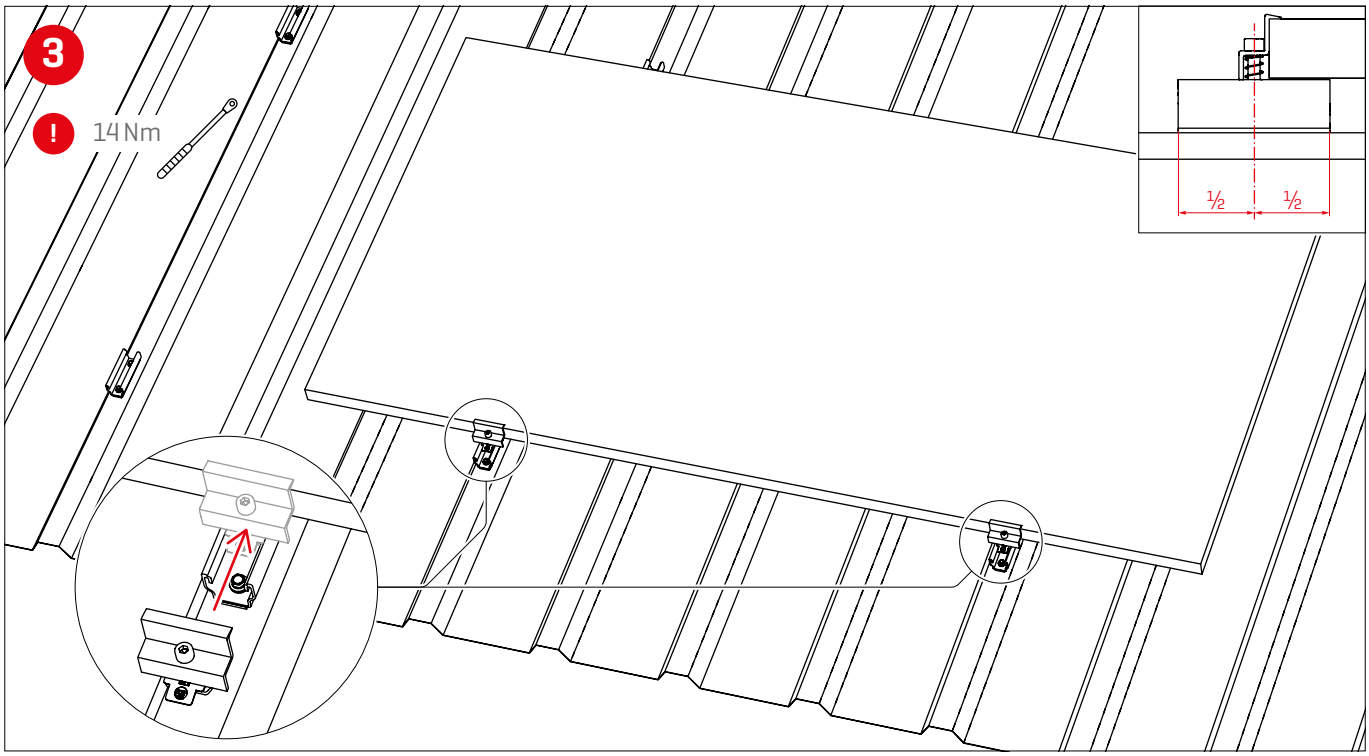
3
!
14 Nm
½
½

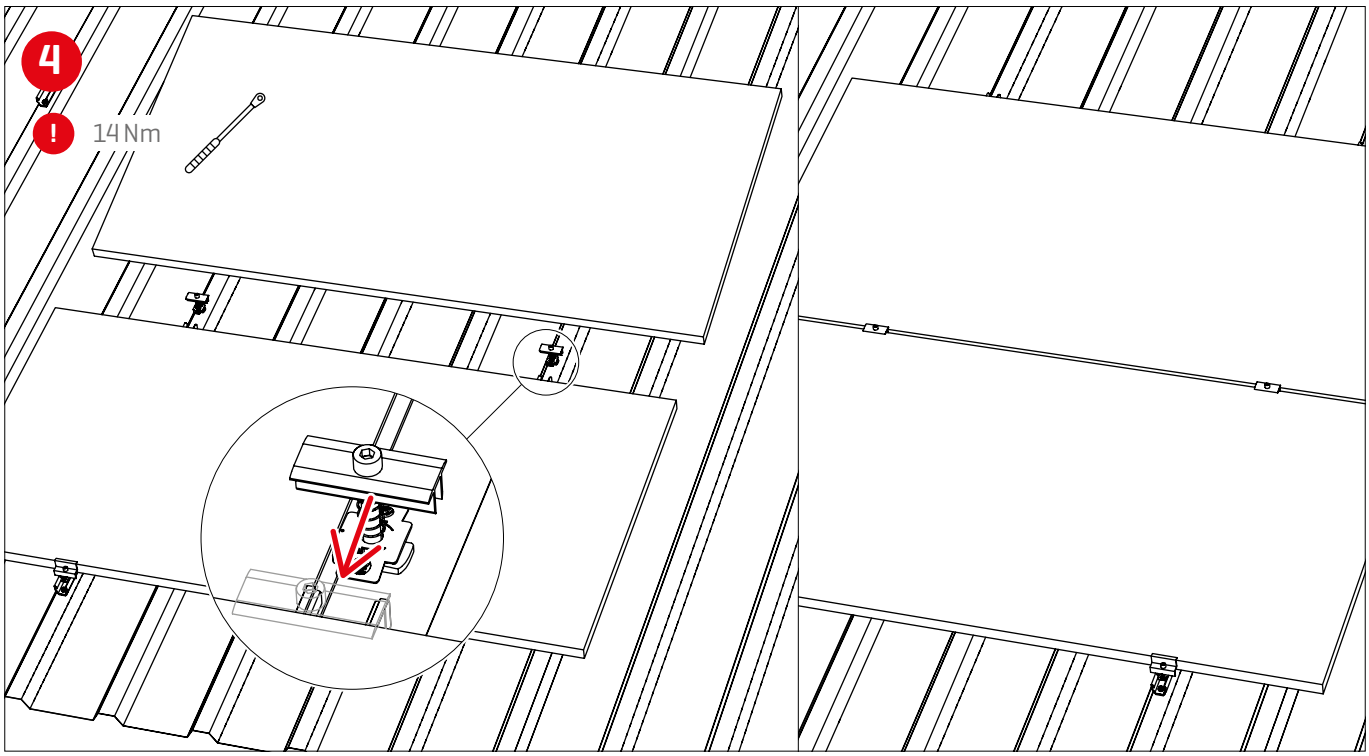
4
!
14 Nm

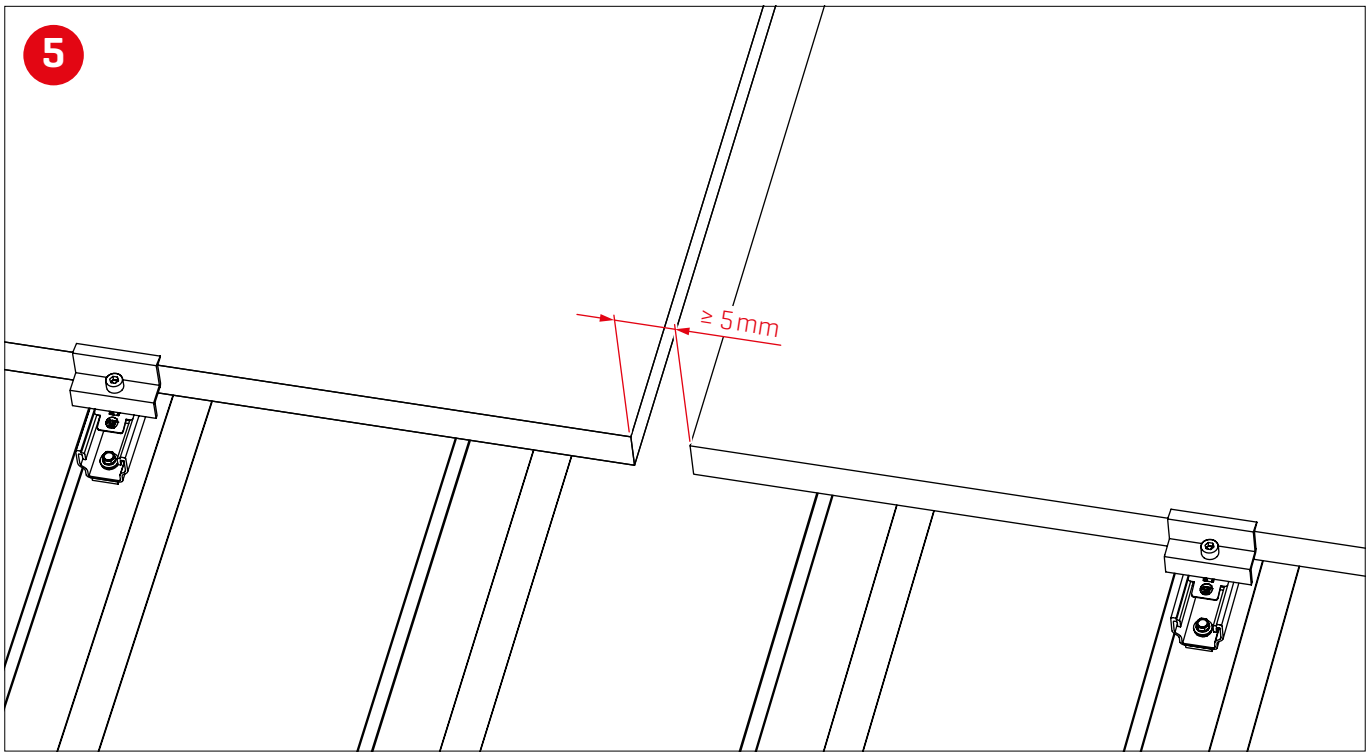
5
≥ 5 mm

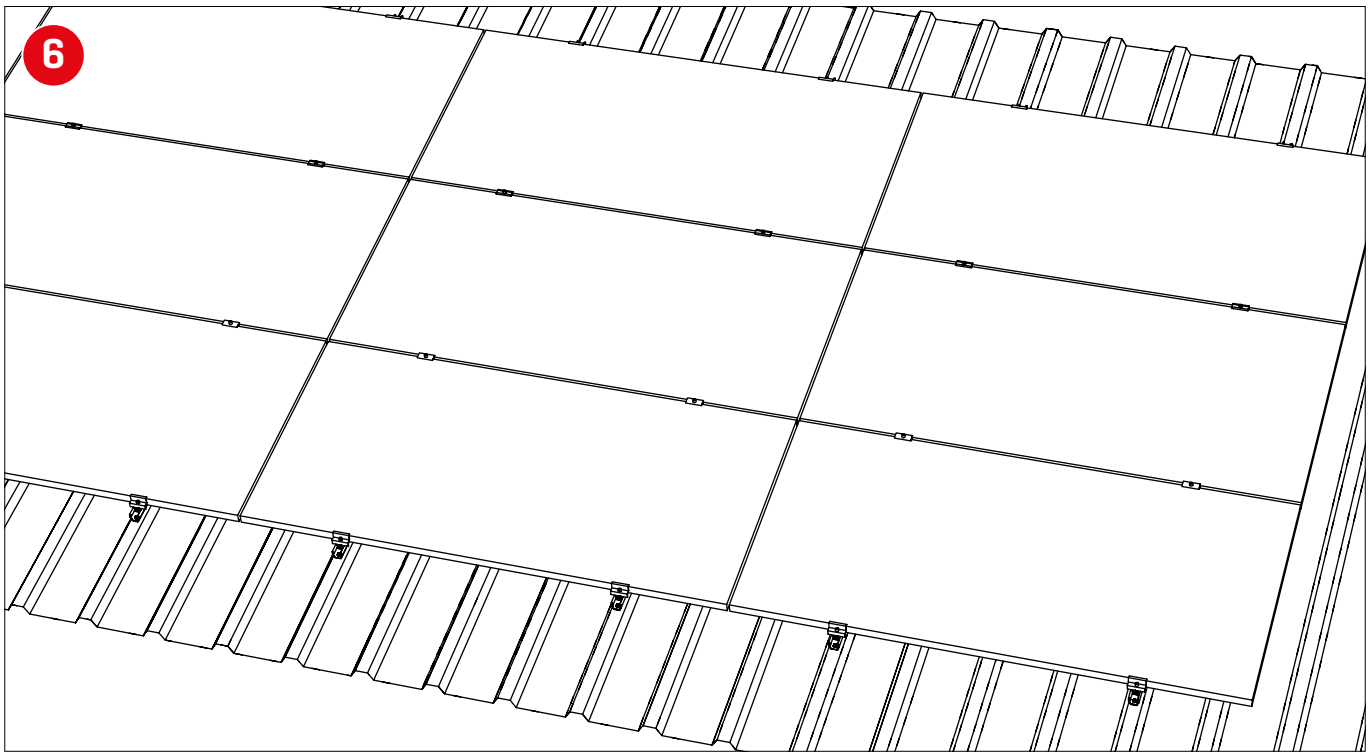
6

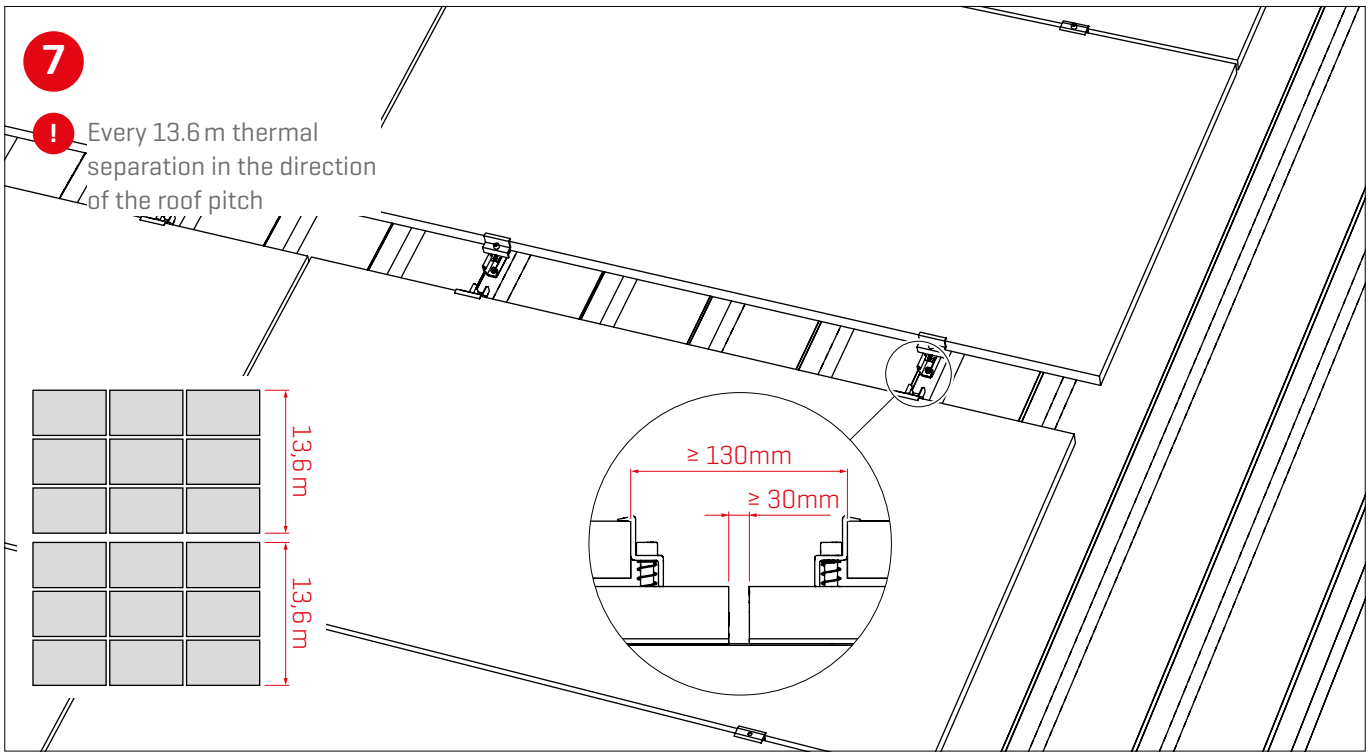
7
!
Every 13.6 m thermal separation in the direction of the roof pitch
13,6 m
13,6 m
≥ 130mm
≥ 30mm

Assembly

Corrugated sheet metal

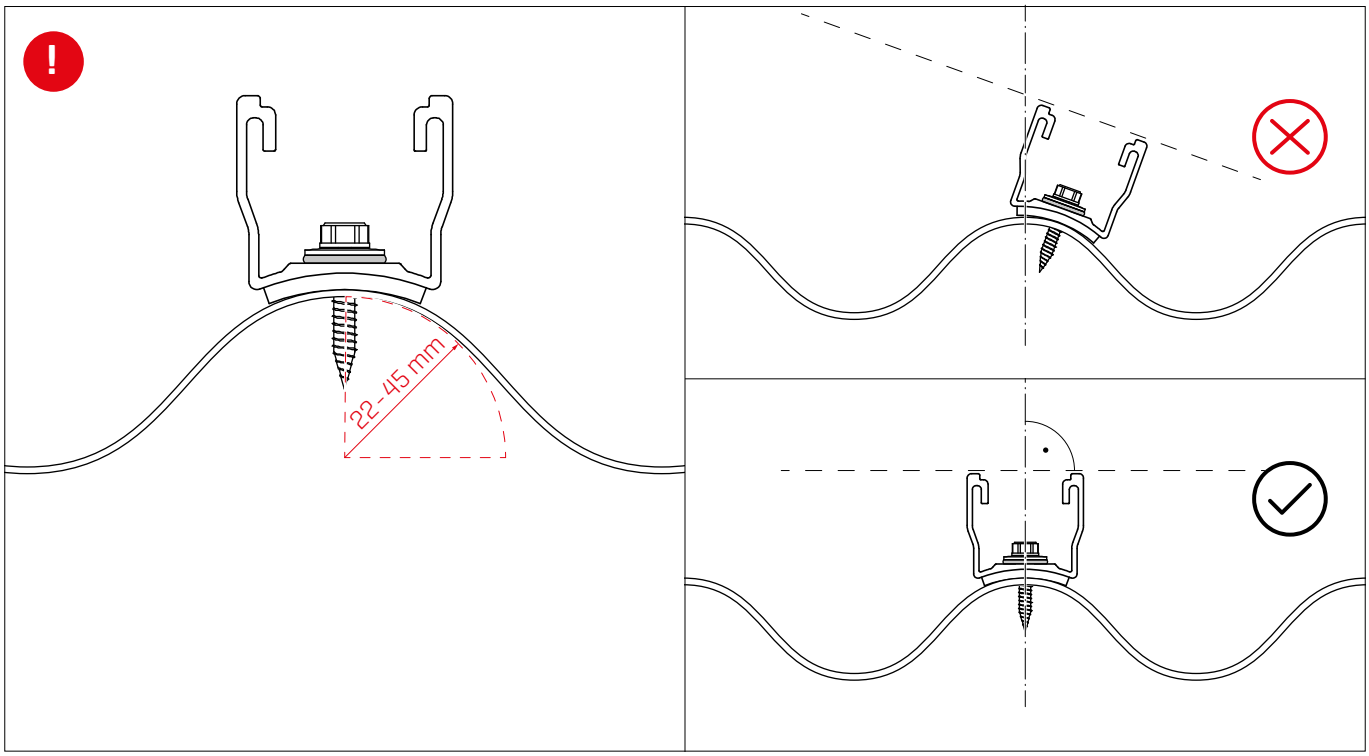

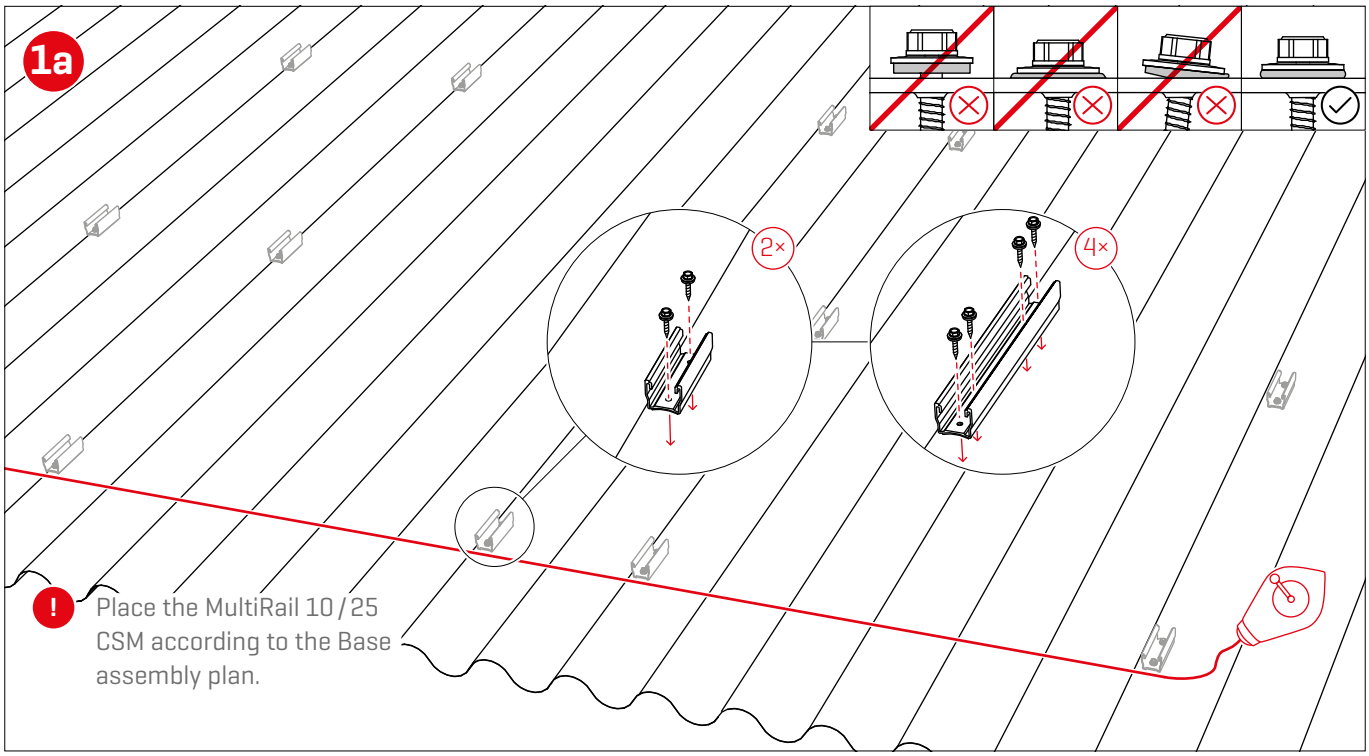

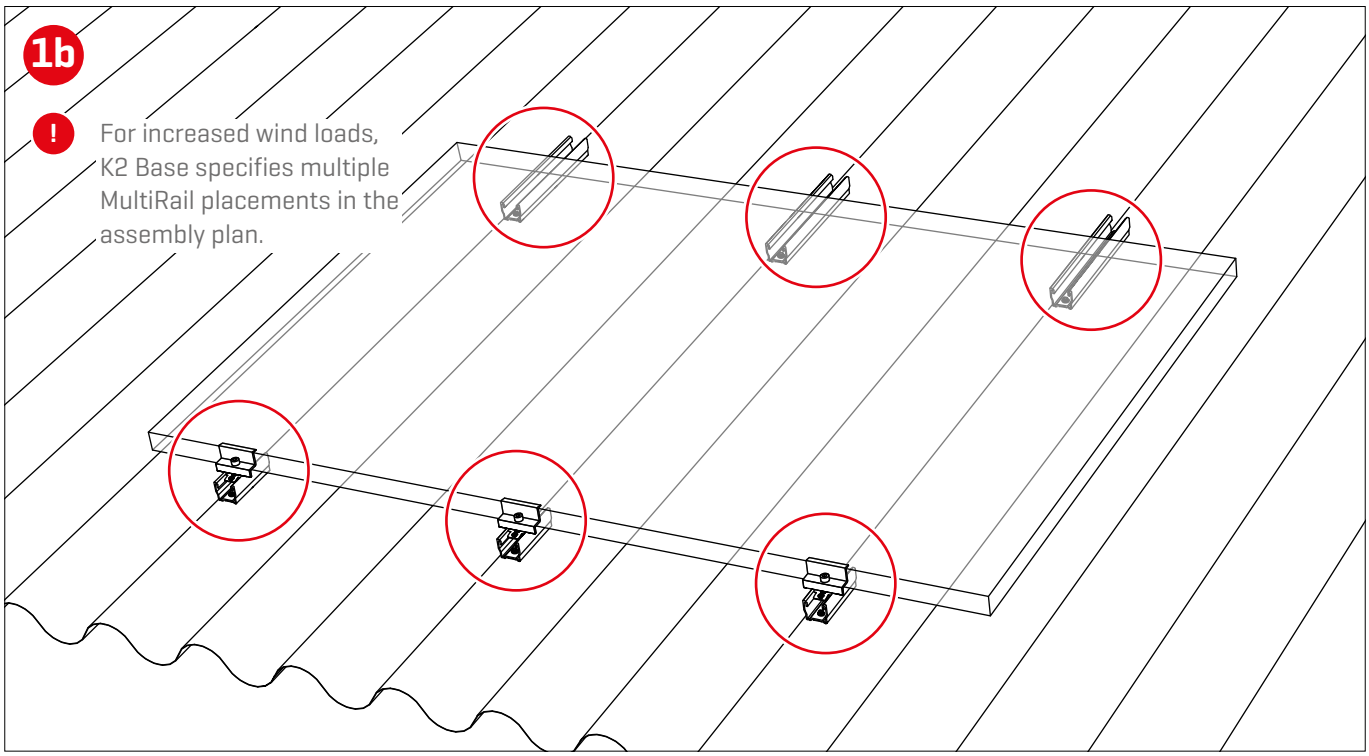
1b
!
For increased wind loads, K2 Base specifies multiple MultiRail placements in the assembly plan.

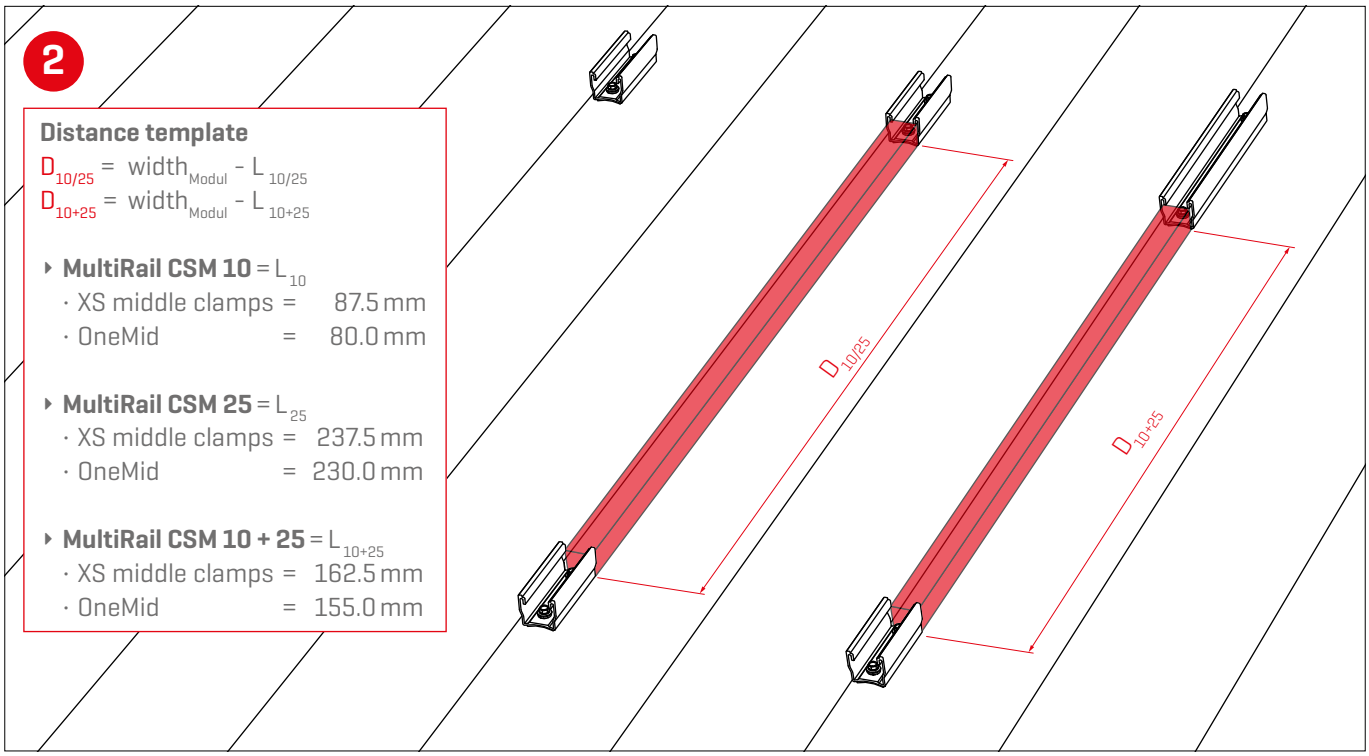
2
Distance template
$D_{10/25}$ = $width_{Modul}$ - $L_{10/25}$
D_{10+25} = $width_{Modul}$ - L_{10+25}
MultiRail CSM 10 = L_{10}
· XS middle clamps = 87.5 mm
· OneMid = 80.0 mm
MultiRail CSM 25 = L_{25}
· XS middle clamps = 237.5 mm
· OneMid = 230.0 mm
MultiRail CSM 10 + 25 = L_{10+25}
· XS middle clamps = 162.5 mm
· OneMid = 155.0 mm
$D_{10/25}$
D_{10+25}

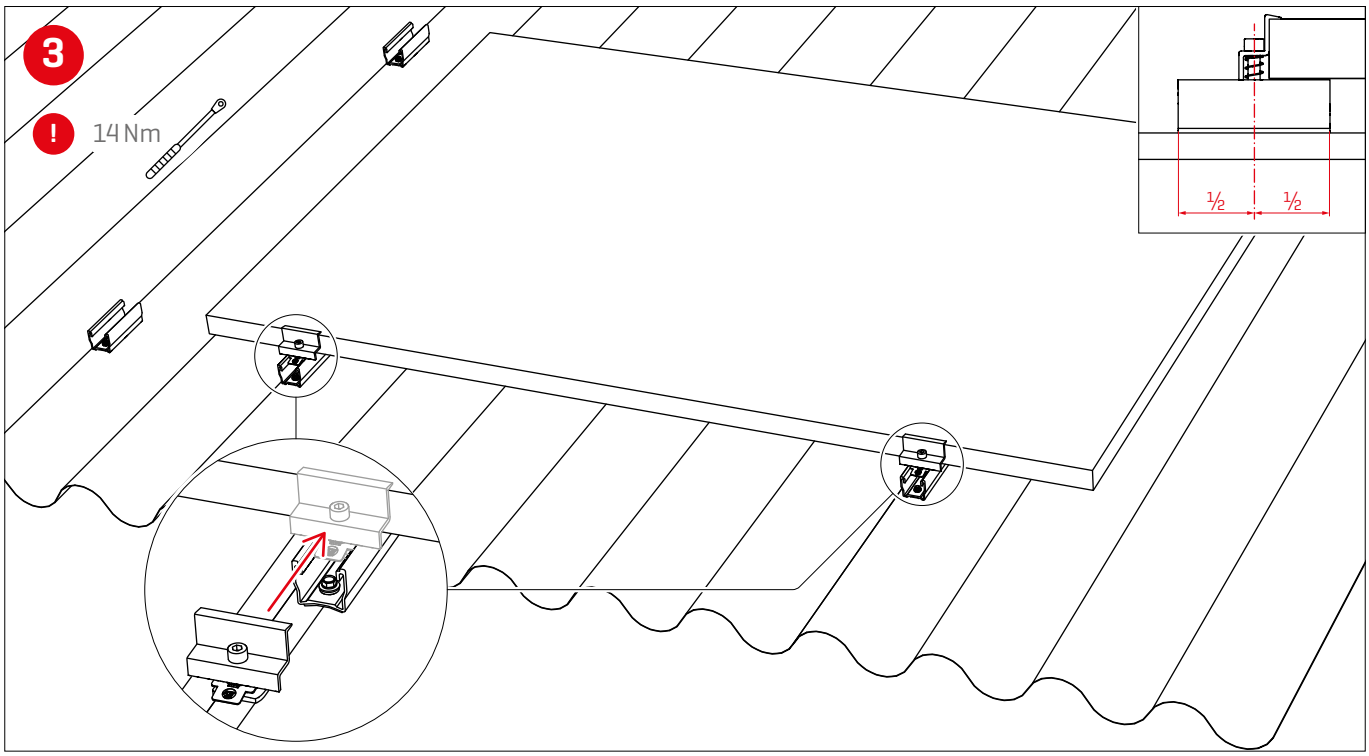
3
!
14 Nm
½
½

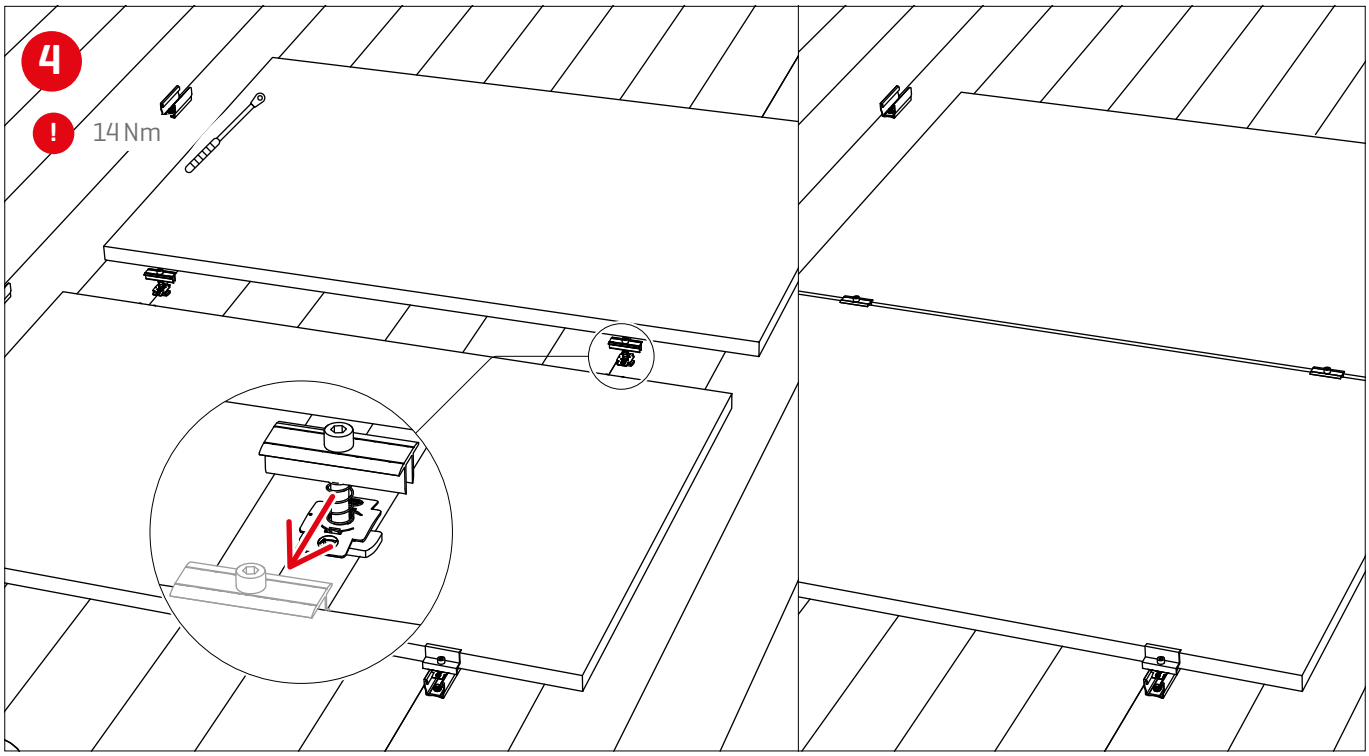
4
!
14 Nm

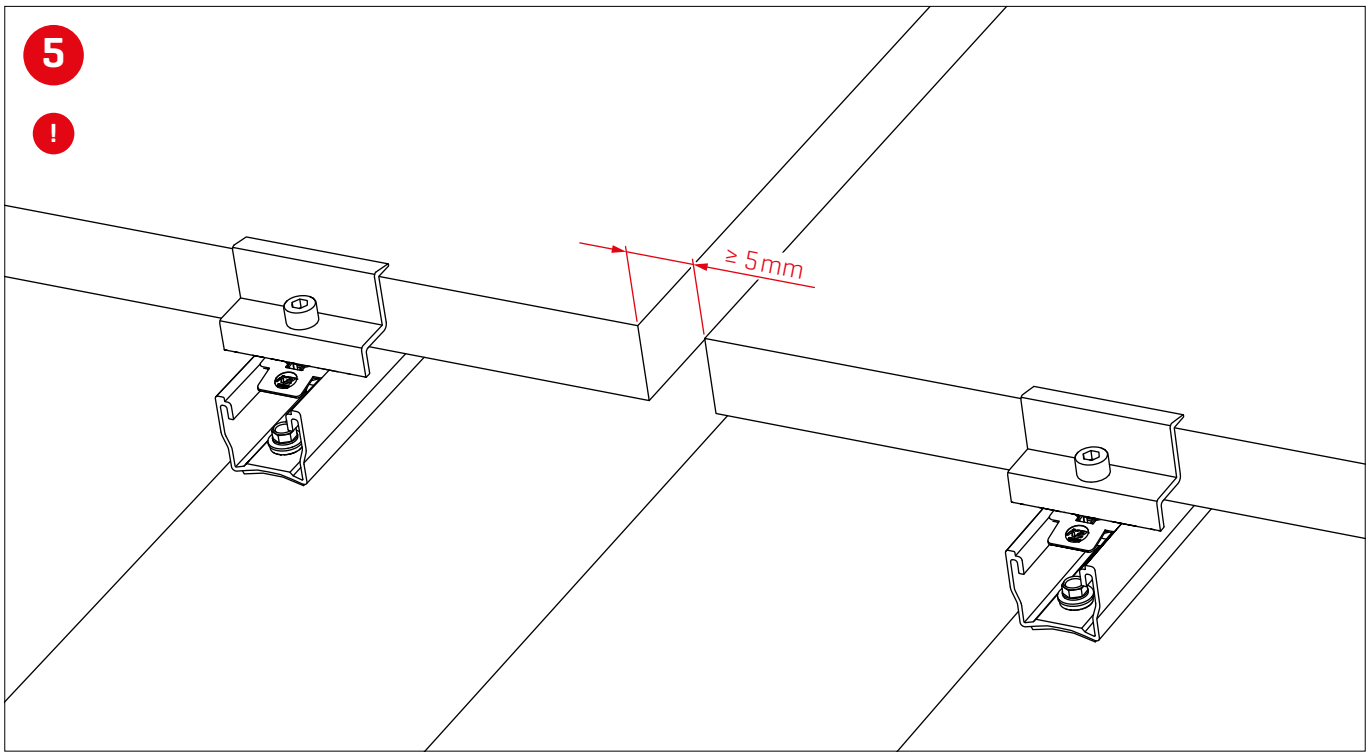
5
!
≥ 5mm

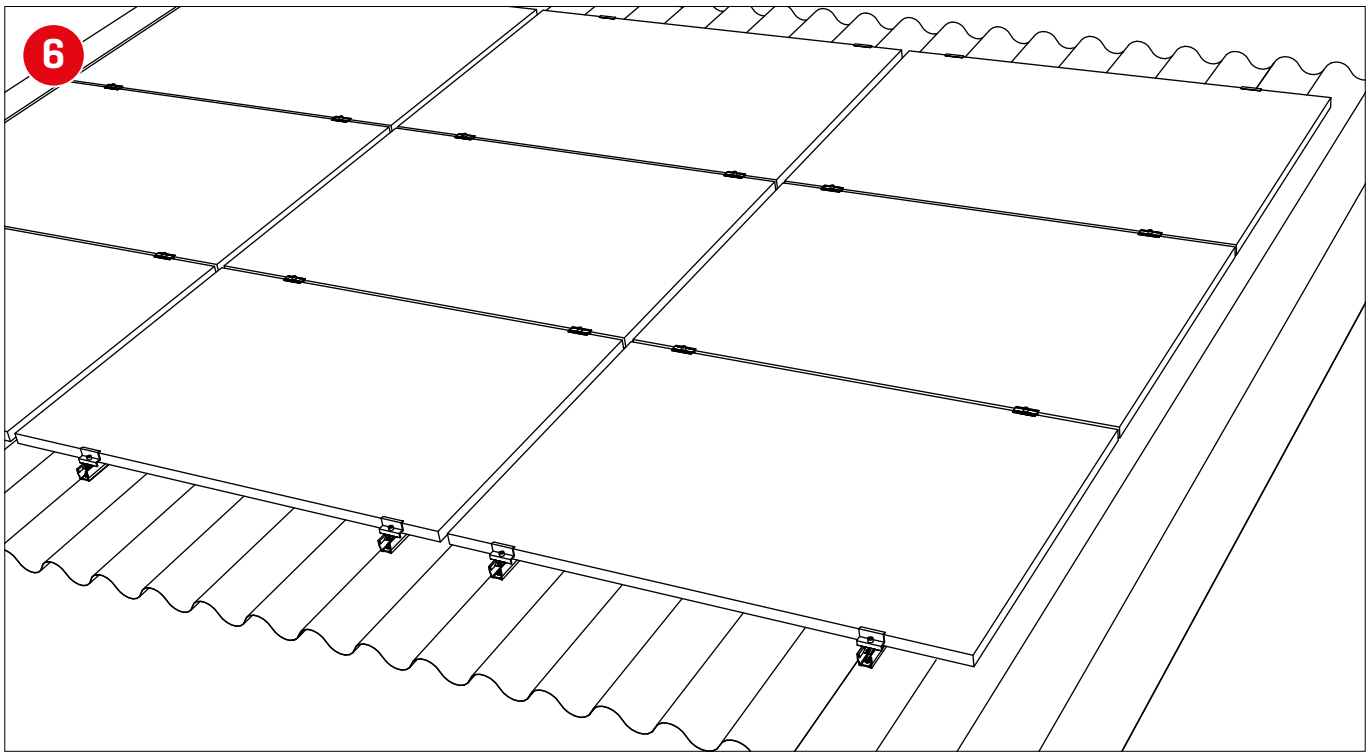
6

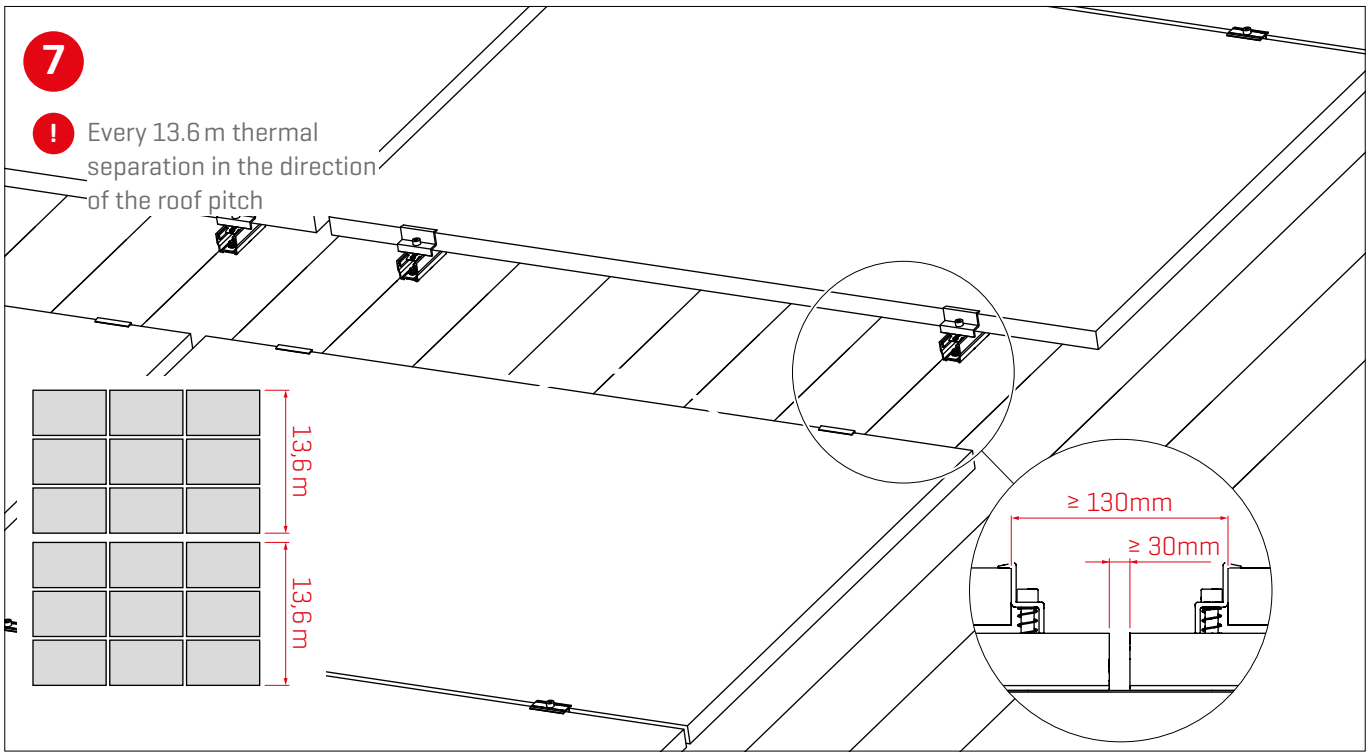
7
! Every 13.6 m thermal separation in the direction of the roof pitch
13,6 m
13,6 m
≥ 130mm
≥ 30mm

Optional assembly steps

Module frame grounding

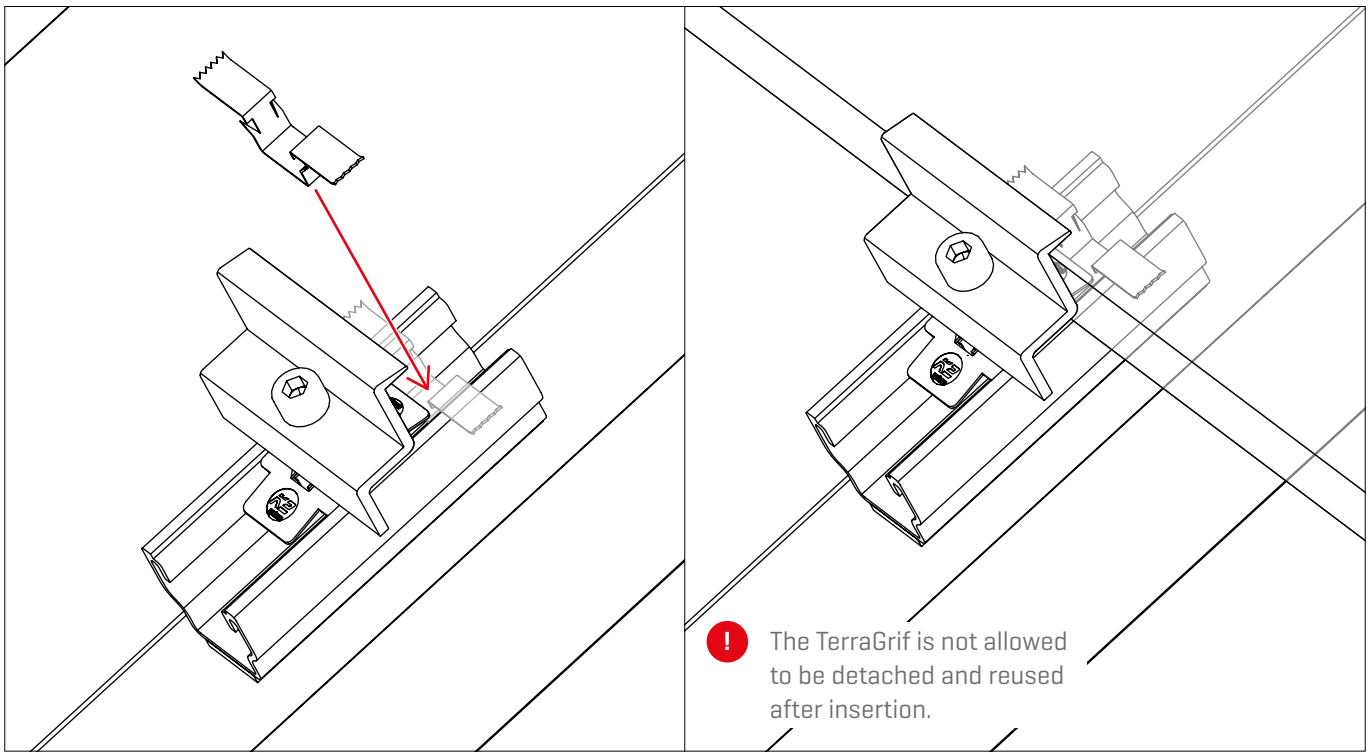

Roof-parallel elevation with RailUp

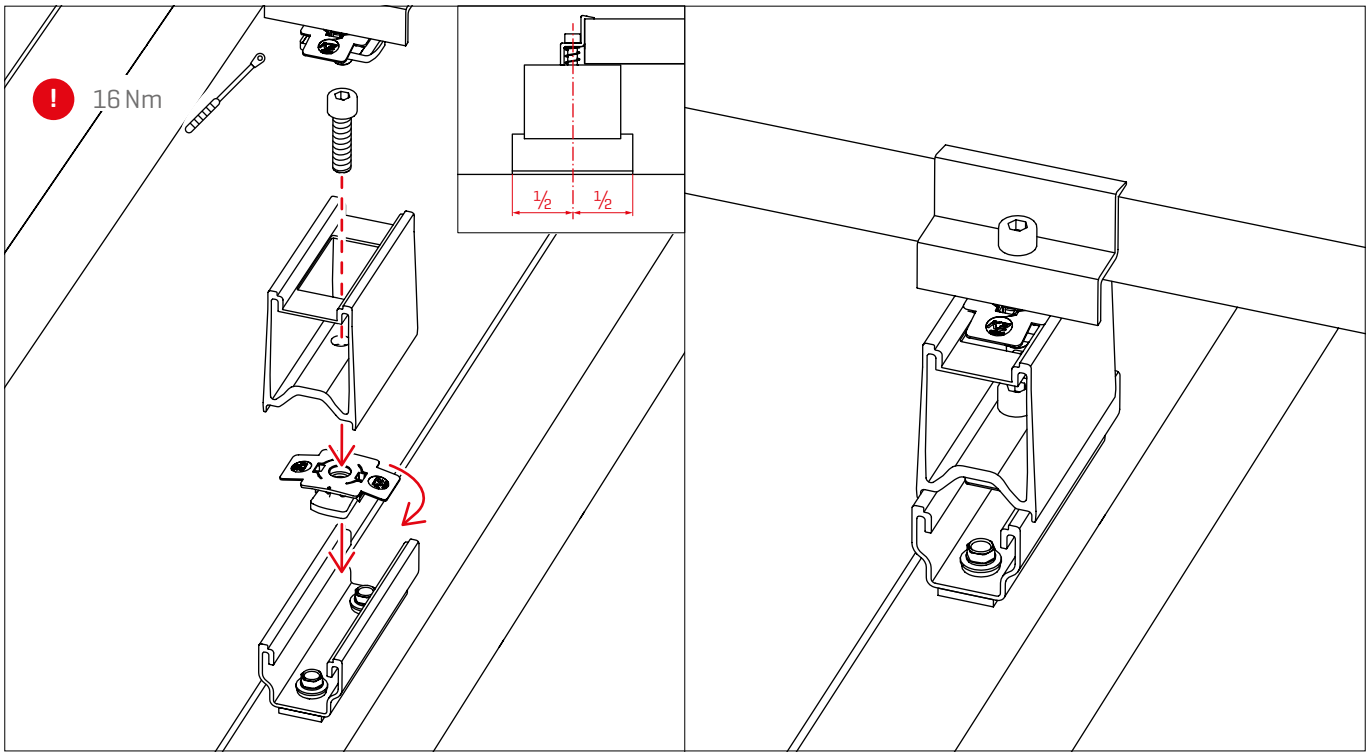

Notes

Notes

We support PV systems

Thank you for choosing a K2 mounting system.

Systems from K2 Systems are quick and easy to install. We hope these instructions have helped. Please contact us with any questions or suggestions for improvement.
Our contact data:

- **k2-systems.com/en/contact**
- **Service Hotline: +49 (0)7159 42059-0**

German law shall apply excluding the UN Convention on CISG. Place of venue is Stuttgart.

Our General Terms of Business apply. Please refer:
k2-systems.com

K2 Systems GmbH

Industriestraße 18
71272 Renningen
Germany

+49 (0) 7159 - 42059 - 0
info@k2-systems.com
www.k2-systems.com